SPANDIDOS PUBLICATIONS

MOLECULAR MEDICINE REPORTS 20: 4683-4687, 2019

# Identification of a novel mutation in the thyroid hormone receptor β gene that causes thyroid hormone resistance syndrome: A case report

JUE WANG and HAIHONG LV

Department of Endocrinology and Metabolism, The First Hospital of Lanzhou University, Lanzhou, Gansu 730000, P.R. China

Received March 24, 2019; Accepted September 10, 2019

DOI: 10.3892/mmr.2019.10703

**Abstract.** Thyroid hormone resistance syndrome is a rare disease in which the level of thyroid hormone is elevated and the level of thyroid stimulating hormone is not suppressed. Mutations in the thyroid hormone receptor β (THRβ) gene are thought to be the primary cause of pathogenesis. In the present study, a Chinese boy of 4 years and 8 months, who had been pre-diagnosed with resistance to thyroid hormone, was assessed for mutations. The clinical features and thyroid function of the proband and his parents were collected and gene mutations were analyzed using DNA sequencing. Gene sequencing showed that the THRβ genes in the parents of the proband were consistent with the standard sequence, however, in the proband there was a mutation in the tenth exon of the THRβ gene (c. 824 T>C). This is a newly identified mutation site and, to the best of our knowledge, there have been no previous reports of this mutation site. Therefore, it is hypothesized that this mutation is the cause of the pathology in the proband.

## Introduction

Thyroid hormone resistance syndrome (RTH) is a disease characterized by a low response to thyroid hormone in target tissues, which may be caused by a thyroid hormone receptor (THR) gene mutation. RTH is a rare disease with an incidence of ~1 in 40,000 (1). This disease has a genetic predisposition, however, a few cases are sporadic (2); sporadic cases are more common in children and adolescents. The clinical features of RTH are diverse and are manifested in a number of ways, including hyperthyroidism, hypothyroidism or non-toxic goiter. However, significantly elevated blood thyroid hormone is a common clinical feature (3).

According to the different subtypes of mutant receptors, RTH is classified into thyroid hormone receptor α (THRα) gene mutation-induced RTH (RTHα) and thyroid hormone receptor β (THRβ) gene mutation-induced RTH (RTHβ) (4). In total, 85% of RTH cases are caused by mutations in the THRβ gene (2,5). RTH is an autosomal dominant heredity disease, with recessive heredity being less common (6). Gene sequencing is the gold standard for diagnosing RTH. The present study identified a rare mutation (p. I275T) in the THRβ gene in a patient with RTH. This is a novel gene mutation site and, to the best of our knowledge, there have been no reports of this mutation before.

## Case report

The Ethics Committee of The First Hospital of Lanzhou University approved the present work. Informed written consent was obtained from the patient for publication of this case report and the accompanying images.

The proband (II:1), a Chinese boy of four years and eight months, visited the hospital due to growth retardation. The parents of the proband said that their son was born 2 weeks prematurely by a caesarean section. At 18 months of age, the proband was often dull and his height was 3-4 cm shorter than his peers. He was treated at a local hospital. There is no relevant medical history in the family. The previous medical records of the proband showed that his nutrition and skin condition was good, that he had no eye symptoms, his intelligence quotient (IQ) was normal, that his height and weight were lower than his peers (related data is shown in Table I), his thyroid was not large, and his thyroid function showed elevated levels of thyroid hormone and thyroid stimulating hormone (TSH). A physician prescribed levothyroxine sodium tablets for the proband. The proband had visited the doctor many times and the dose of the drug had been adjusted, however, the thyroid function did not recover (thyroid function and therapy process are shown in Table II). At present, the proband is prescribed with oral levothyroxine sodium tablets at a dose of 100 μg/day. The family tree of the proband and his parents are shown

*Correspondence to:* Professor Haihong Lv, Department of Endocrinology and Metabolism, The First Hospital of Lanzhou University, 1 Donggang West Road, Lanzhou, Gansu 730000, P.R. China
E-mail: haihonglv@126.com

*Abbreviations:* FT4, free thyroxine; FT3, free triiodothyronine; RTH, thyroid hormone resistance syndrome; TSH, thyroid stimulating hormone

*Key words:* thyroid hormone resistance syndrome, gene sequencing, thyroid hormone receptor β, point mutation

in Fig. 1. Among the two generations, only the proband had thyroid dysfunction and his parents had no relevant medical history.

Comprehensive examinations of proband and his parents were performed. Information about the age, height and weight, and heart rate of the proband and his parents is shown in Table III. The proband was shorter than his peers, however, other measurements for the proband were within the normal range. The thyroid function of the parents of the proband are shown in Table IV. The free triiodothyronine (FT3), free thyroxine (FT4) and TSH levels in the proband were higher than normal, while the thyroid function of his parents were normal. Peripheral blood examinations showed the following: Platelets, $348x10^9$/l in routine blood tests (reference value, 100-300); trace element results, Zn 4.95 mg/l (reference value, 57.5-78), Ca 56.6 mg/l (reference value, 57.5-78), Fe 327 mg/l (reference value, 301-530), Mg 30.1 mg/l (reference value, 27-46), Pb 45.6 $\mu$g/l (reference value, 0-100), Cu 0.85 mg/l (reference value, 0.64-1.4); growth hormone 0.23 ng/ml (reference value, <3.0); insulin-like growth factor-1,151.00 ng/ml (reference value, 51-303); vitamin D 13.21 ng/ml (reference value, 30-60); intact parathyroid hormone 28.00 pg/ml (reference value, 16-87); bone alkaline phosphatase 210 U/l (reference value, 0-200); N-MID BGP (N-MID bone Gla protein) 63.83 ng/ml (reference value, 9.74-39.47); ferritin 96.77 ng/ml (reference value, 4.63-204), total cholesterol 4.11 mmol/l (reference value, 3.6-5.7), triglycerides 0.94 mmol/l (reference value, 0.8-1.8), creatine kinase 85 U/l (reference value, 38-240). The wrist anterior segment (Fig. 2) suggested that the bone age was less than the actual age. Thyroid color ultrasound examination showed normal. The thyroid iodine uptake was 10.2% at 2 h (reference value, 5-15%), 19.2% at 6 h (reference value, 15-25%), 31.8% at 24 h (reference value, 25-40%). The basal metabolic rate was 219 KJ/h. Pituitary nuclear magnetic imaging plain scan tips showed that the pituitary morphology was normal. The proband also had a normal electrocardiogram.

Gene sequencing suggested that the proband had a point mutation in the 10th exon of the THRβ gene (c. 824 T>C). T at position 824 of the THRβ gene coding sequence was replaced by C (Fig. 3), resulting in the replacement of isoleucine at position 275 with threonine (p. I275T). This is a novel mutation and, to the best of our knowledge, there have been no previous reports of this mutation. The parents of the proband had T at this position, which is consistent with the standard sequence. Computational mutation prediction was conducted (Fig. 4). The crystal structure of the THRβ-T3 complex was used as a reference wild-type structure. The THRβ conserved domain was analyzed using the NCBI/Structure/Cdd tool (https://www.ncbi.nlm.nih.gov/Structure/cdd/wrpsb.cgi). The amino acid at position 275 is located just inside the ligand binding site and the co-activation recognition site. The sequence-based mutation prediction for I275T was found to be damaging according to NCBI/Structure/Cdd.

Table I. Height and weight of the proband.

| | Age, years | | | | | |
|---|---|---|---|---|---|---|
| Variable | 2 | 2.5 | 3 | 3.5 | 4 | 4.5 |
| Height, cm | 77.2 | 80.1 | 86.3 | 90.5 | 95.2 | 99.6 |
| Weight, kg | 9.5 | 10.8 | 11.9 | 12.5 | 15.0 | 19.4 |

Table II. Thyroid function and treatment program for the proband.

| | Thyroid function | | | Treatment program |
|---|---|---|---|---|
| Date | FT3 (3.1-6.8 pmol/l) | FT4 (9.8-22 pmol/l) | TSH (0.31-5.3 mIU/l) | (Levothyroxine, $\mu$g/day) |
| 12/22/2015 | 6.85 | 14.10 | >150 | 25.0 |
| 01/22/2016 | 5.97 | 12.63 | >150 | 37.5 |
| 03/22/2016 | 5.93 | 18.77 | >150 | 50.0 |
| 07/19/2016 | 4.63 | 13.52 | >150 | 50.0 |
| 10/05/2016 | 6.56 | 18.31 | >100 | 62.5 |
| 11/12/2016 | 7.78 | 26.40 | 25.72 | 75.0 |
| 12/26/2016 | 9.22 | 36.94 | 0.90 | 87.5 |
| 04/24/2017 | 7.63 | 25.59 | 6.64 | 87.5 |
| 06/17/2017 | 9.16 | 29.31 | 6.82 | 87.5 |
| 04/02/2018 | 9.07 | 39.08 | 7.20 | 100.0 |
| 07/30/2018 | 7.90 | 36.80 | 9.44 | 100.0 |
| 08/11/2018 | 7.84 | 32.8 | 35.06 | 100.0 |

The values in brackets indicate reference values. FT3, free triiodothyronine; FT4, free thyroxine; TSH, thyroid stimulating hormone.

## Discussion

Refetoff and Dumitrescu (1) first reported a case of RTH in 1967. It is thought that most cases of RTH are a result of autosomal dominant or recessive hereditary with familial onset, however, occasionally it is sporadic. RTH has no gender or ethnic differences and can occur in all age groups (7). According to the onset and clinical manifestations of RTH, the disease is divided into three categories, global resistance (GRTH), pituitary resistance to thyroid hormone (PRTH) and peripheral resistance to thyroid hormone (PrRTH). In total, ~80% of patients with RTH belong to the GRTH type, while PRTH is not common, and only a few cases of PrRTH have been reported (8). The pathogenesis of the disease is mainly through THR dysfunction caused by mutations of the gene encoding THRβ. However, ~10% of cases of RTH are due to other factors, including decreased number of THR, absence of THR and unknown causes (9). RTH is associated with the THRβ locus on chromosome 3 and THRβ gene mutations are considered to be the most important cause of RTH (10,11). In total, ~80% of RTH cases are caused by THRβ gene mutations, however, such mutations are not found in 10-15% of cases (7,8,10). The THRβ gene consists of 10 exons and 9 introns, encoding a protein of 461 amino acids. Gene sequencing is the golden standard for the diagnosis of RTH. To date, all THRβ mutations that have been identified are located in three hotspot regions between exons 7 and 10 (234-282, 310-353 and 429-461) (12-18).

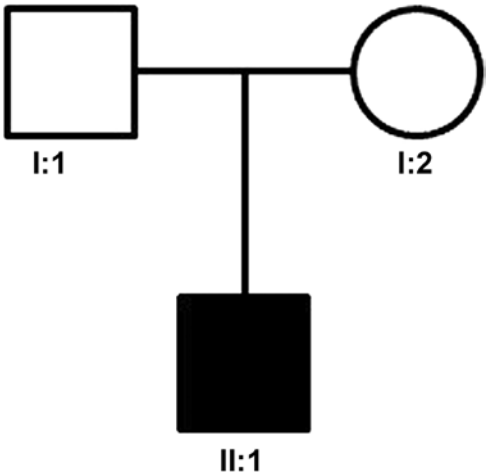


Figure 1. Pedigree of thyroid hormone resistance syndrome. Among the two generations, only the proband had abnormal thyroid function and his parents had no relevant medical history.

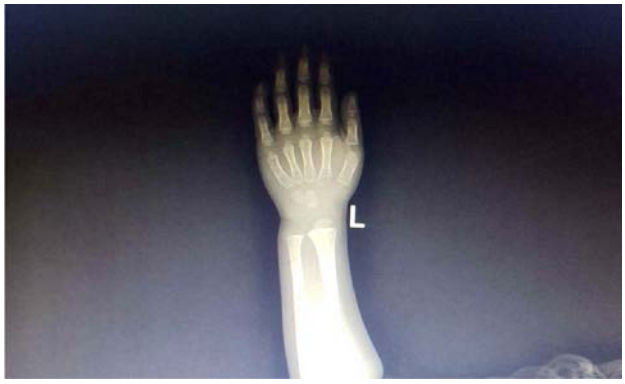


Figure 2. Wrist anterior segment of the proband. The wrist anterior segment suggested that the bone age was less than the actual age.

Table III. Information about the proband and his parents.

| Proband/ patient | Sex | Age, years | Height, cm | Weight, kg | Heart rate (beats/min) |
|---|---|---|---|---|---|
| I:1 | M | 22 | 170 | 67 | 72 |
| I:2 | F | 22 | 168 | 66 | 78 |
| II:1 | M | 4 | 100 | 20 | 99 |

F, female; M, male.

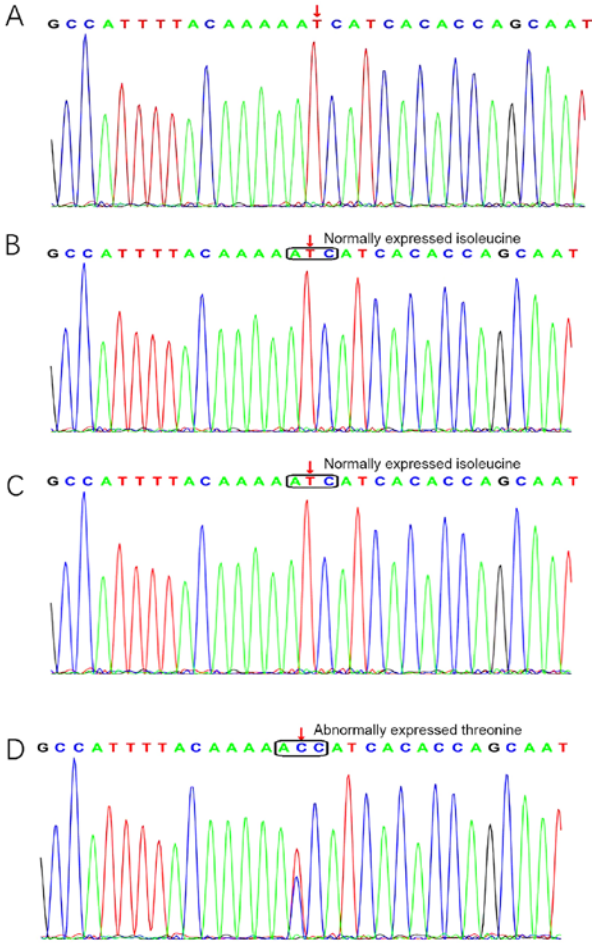


Figure 3. Partial sequencing results of exon 10 for the THRβ gene. (A) Reference gene sequence. The (B) father and (C) mother of the proband. (D) The proband. The arrows indicate the mutation site in the 10th exon of the THRβ gene (c. 824 T>C). The mutation results in T at position 824 of the THRβ gene being replaced with C, resulting in the replacement of the amino acid isoleucine at position 275 with threonine (p. I275T). THRβ, thyroid hormone receptor β.

RTH has various clinical manifestations and is difficult to diagnose, however, laboratory examinations identify specific characteristics; thyroid hormone and TSH levels are elevated during the course of the illness. The thyroid function of the proband showed that FT3, FT4 and TSH levels were elevated during the course of the illness. Even in the later period, FT3 and FT4 were higher than normal after the proband was treated with a high dose of levothyroxine tablets. Although TSH decreased, it did not reach normal levels. The THR gene of the proband was sequenced. The results of sequencing revealed a point mutation in the 10th exon of the THRβ gene (c. 824 T>C). This variant site is located within the three hotspot regions between exon 7 and 10. This point mutation caused the amino acid isoleucine at position 275 to be replaced with threonine (p. I275T). The physical and chemical properties of these two amino acids are quite different. Isoleucine is an aliphatic neutral amino acid, soluble in water and slightly soluble in ethanol. However, the pH of threonine is 5.0-6.5, it is soluble in water at high temperatures and insoluble in ethanol. In the present study, NCBI/Structure/Cdd was used to analyze the conserved domain of THRβ. The amino acid at position 275 is located just inside the ligand binding site and the co-activation recognition site. The sequence-based mutation prediction for I275T showed that this change was probably damaging to the protein. Therefore, it is hypothesized that the mutation site in the proband interferes with the binding of THR to ligands. When isoleucine is mutated to threonine at this site, the binding capacity of THR to the ligand may be greatly reduced, resulting in symptoms of RTH.

According to clinical features, laboratory examination, gene sequencing and treatment, the proband was diagnosed

Table IV. Thyroid function of the parents of the proband.

| Date | Parent | FT3 (3.1-6.8 pmol/l) | TT3 (1.14-3.02 nmol/l) | FT4 (9.8-22 pmol/l) | TT4 (75.45-148.18 nmol/l) | TSH (0.31-5.3 mIU/l) |
|---|---|---|---|---|---|---|
| 03/22/2016 | I:1 | 5.91 | 2.91 | 16.93 | 142.01 | 1.58 |
| | I:2 | 4.83 | 2.87 | 15.72 | 112.40 | 0.83 |
| 08/11/2018 | I:1 | - | 2.89 | - | 145.06 | 1.46 |
| | I:2 | - | 2.81 | - | 105.97 | 0.72 |

The values in brackets indicate reference values. FT3, free triiodothyronine; FT4, free thyroxine; TSH, thyroid stimulating hormone; TT3, total triiodothyronine; TT4, total thyroxine.

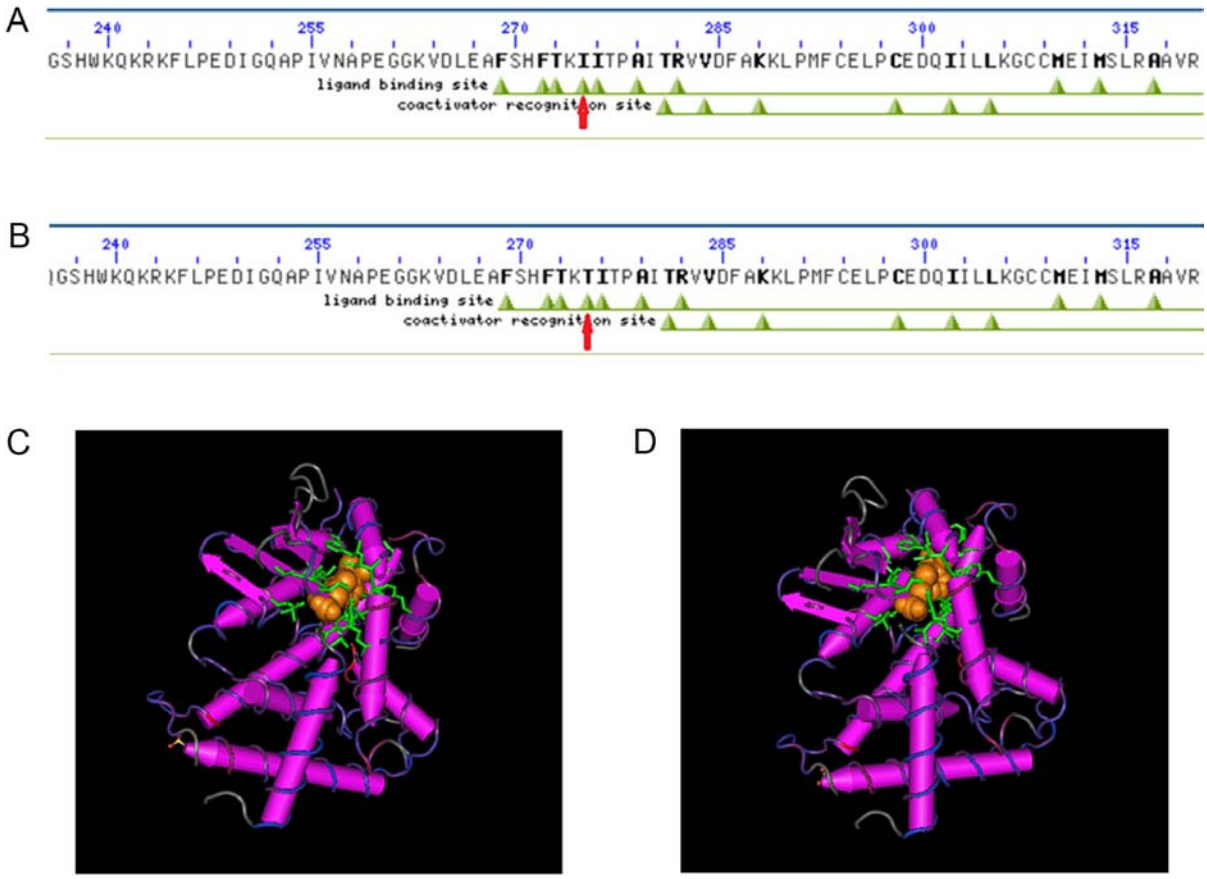


Figure 4. Computational mutation prediction. (A) Protein sequence of wild-type THRβ. The green triangle indicated by the red arrow is the isoleucine at position 275, which is located within the ligand binding site and the co-activation recognition site. (B) The protein sequence of the proband. The green triangle indicated by the red arrow is the threonine at position 275. (C) The crystal structure of wild-type THRβ-T3 complex and (D) the crystal structure of the THRβ-T3 complex from the proband. THRβ, thyroid hormone receptor β.

with RTH. The proband was treated with 100 $\mu$g of oral levothyroxine sodium daily for 1 year and clinical symptoms were gradually improved, however, TSH, FT3 and FT4 levels were still elevated. As the present treatment is effective, drug therapy continues. The current symptoms of the proband include slow growth and development, along with other manifestations, such as reduced activity and intelligence. It could be attributed to oral administration of a high dose levothyroxine sodium tablets, so the proband's growth retardation is improved compared to no treatment and IQ score is normal. As the proband is a child, follow-up treatment is important to promote growth, bone maturity and mental development. Therefore, it is recommended that the parents and physicians continue to observe the growth and mental development of the proband.

In conclusion, RTH has no specific clinical features, and may be associated with sinus tachycardia, goiter, hyperactivity, growth retardation and other symptoms, which makes diagnosing this disease difficult. Gene sequencing can improve diagnosis. Therefore, genetic sequencing is recommended for initial diagnosis and the appropriate treatment of patients with clinically suspected RTH.

**Acknowledgements**

Not applicable.

**Funding**

No funding was received.

**Availability of data and materials**

The datasets used and/or analyzed during the current study are available from the corresponding author on reasonable request.

**Authors' contributions**

JW conceived the present study, participated in its design, carried out the molecular genetic studies literature, helped to draft the manuscript, and carried out and interpreted the results of the molecular genetic tests. HL jointly conceived the present study, participated in the coordination, helped to draft the manuscript and contributed to the interpretation of the results.

**Ethics approval and consent to participate**

The Ethics Committee of The First Hospital of Lanzhou University approved the present work.

**Patient consent for publication**

Written informed consent was obtained from the patient's family for publication of this case report and the accompanying images, and the use of data for both the patient and the family.

**Competing interests**

The authors declare that they have no competing interests.

**References**

1. Refetoff S and Dumitrescu AM: Syndromes of reduced sensitivity to thyroid hormone: Genetic defects in hormone receptors, cell transporters and deiodination. Best Pract Res Clin Endocrinol Metab 21: 277-305, 2007.
2. Refetoff S: Resistance to thyroid hormone: One of several defects causing reduced sensitivity to thyroid hormone. Nat Clin Pract Endocrinol Metab 4: 1, 2008.
3. Beck-Peccoz P and Chatterjee VK: The variable clinical phenotype in thyroid hormone resistance syndrome. Thyroid 4: 225-232, 1994.
4. Refetoff S, Bassett JH, Beck-Peccoz P, Bernal J, Brent G, Chatterjee K, De Groot LJ, Dumitrescu AM, Jameson JL, Kopp PA, *et al*: Classification and proposed nomenclature for inherited defects of thyroid hormone action, cell transport, and metabolism. J Clin Endocrinol Metab 99: 768-770, 2014.
5. Reutrakul S, Sadow PM, Pannain S, Pohlenz J, Carvalho GA, Macchia PE, Weiss RE and Refetoff S: Search for abnormalities of nuclear corepressors, coactivators, and a coregulator in families with resistance to thyroid hormone without mutations in thyroid hormone receptor beta or alpha genes. J Clin Endocrinol Metab 85: 3609-3617, 2000.
6. Massaad D, Poppe K, Lissens W and Velkeniers B: A case of thyroid hormone resistance: Prospective follow-up during pregnancy and obstetric outcome. Eur J Intern Med 18: 253-254, 2007.
7. Hamon B, Hamon P, Bovier-Lapierre M, Pugeat M, Savagner F, Rodien P and Orgiazz J: A child with resistance to thyroid hormone without thyroid hormone receptor gene mutation: A 20-year follow-up. Thyroid 18: 35-44, 2008.
8. Agrawal NK, Goyal R, Rastogi A, Naik D and Singh SK: Thyroid hormone resistance. Postgrad Med J 84: 473-477, 2008.
9. Wu SY, Sadow PM, Refetoff S and Weiss RE: Tissue responses to thyroid hormone in a kindred with resistance to thyroid hormone harboring a commonly occurring mutation in the thyroid hormone receptor beta gene (P453T). J Lab Clin Med 146: 85-94, 2005.
10. Mamanasiri S, Yesil S, Dumitrescu AM, Liao XH, Demir T, Weiss RE and Refetoff S: Mosaicism of a thyroid hormone receptor-beta gene mutation in resistance to thyroid hormone. J Clin Endocrinol Metab 91: 3471-3477, 2006.
11. Nagaya T and Seo H: Molecular basis of resistance to thyroid hormone (RTH). Endocr J 45: 709-718, 1998.
12. Kim JH, Park TS, Baek HS, Kim GH, Yoo HW and Park JH: A newly identified insertion mutation in the thyroid hormone receptor-beta gene in a Korean family with generalized thyroid hormone resistance. J Korean Med Sci 22: 560-563, 2007.
13. Refetoff S: Resistance to thyroid hormone with and without receptor gene mutations. Ann Endocrinol (Paris) 64: 23-25, 2003.
14. Collingwood TN, Adams M, Tone Y and Chatterjee VK: Spectrum of transcriptional, dimerization, and dominant negative properties of twenty different mutant thyroid hormone beta-receptors in thyroid hormone resistance syndrome. Mol Endocrinol 8: 1262-1277, 1994.
15. Gurnell M, Rajanayagam O, Agostini M, Clifton-Bligh RJ, Wang T, Zelissen PM, van der Horst F, van de Wiel A, Macchia E, Pinchera A, *et al*: Three novel mutations at serine 314 in the thyroid hormone beta receptor differentially impair ligand binding in the syndrome of resistance to thyroid hormone. Endocrinology 140: 5901-5906, 1999.
16. Yen PM: Molecular basis of resistance to thyroid hormone. Trends Endocrinol Metab 14: 327-333, 2003.
17. Parrilla R, Mixson AJ, McPherson JA, McClaskey JH and Weintraub BD: Characterization of seven novel mutations of the c-erbA beta gene in unrelated kindreds with generalized thyroid hormone resistance. Evidence for two 'hot spot' regions of the ligand binding domain. J Clin Invest 88: 2123-2130, 1991.
18. Adams M, Matthews C, Collingwood TN, Tone Y, Beck-Peccoz P and Chatterjee KK: Genetic analysis of 29 kindreds with generalized and pituitary resistance to thyroid hormone. Identification of thirteen novel mutations in the thyroid hormone receptor beta gene. J Clin Invest 94: 506-515, 1994.