INTERNATIONAL JOURNAL OF MOLECULAR MEDICINE 25: 315-320, 2010

SPANDIDOS PUBLICATIONS

Application of allele-specific primer extension-based microarray for simultaneous multi-gene mutation screening in patients with non-syndromic hearing loss

SOO-YOUNG CHOI[1*], KYU-YUP LEE[2*], YOUNG-EUN KIM[3], JAE-WOONG BAE[1], SE-KYUNG OH[1], SO-YEON KIM[1], SANG-JOON HWANG[3], UN-KYUNG KIM[1] and SANG-HEUN LEE[2]

[1]Department of Biology, College of Natural Sciences; [2]Department of Otolaryngology-Head and Neck Surgery, College of Medicine, Kyungpook National University, Deagu; [3]Digital Genomics, Seoul, Korea

Received September 16, 2009; Accepted October 29, 2009

DOI: 10.3892/ijmm_00000347

Abstract. Congenital hearing loss (HL) is the most common sensory disorder in humans, affecting one in 1000 infants at birth. A high degree of genetic heterogeneity makes it difficult to screen for mutations in all known deafness genes in clinical applications. We have improved a genotyping microarray using the multiplex PCR-based allele-specific primer extension (ASPE) reaction and applied this method for the genetic diagnosis of congenital HL in Korea. Seven different mutations in the *GJB2, SLC26A4* and mitochondrial 12S rRNA genes, which were identified on the basis of a previous study in a Korean population, were selected for the study. These genes were used to evaluate the accuracy of the microarray. The test for validation of the current version of HL genotyping micro-array was fully concordant with the results of DNA sequencing in which 51 subjects with non-syndromic HL were originally genotyped. Furthermore, the blind test of the genotyping microarray detected four different mutations in 10 out of 65 patients, and the accuracy of microarray was calculated as 98% (64/65). Therefore, our results suggest that this HL genotyping microarray will be useful in clinical applications for the genetic diagnosis of HL.

Introduction

Hearing loss (HL) is a genetically heterogeneous disorder. To date, >120 loci and 47 genes encoding proteins with a wide variety of functions have been identified as being involved in non-syndromic HL, and these numbers are increasing (Hereditary Hearing Loss Homepage; http://webh01.ua.ac.be/hhh). In spite of this large heterogeneity, mutations in the *GJB2* gene, which encodes for connexin 26 (Cx26), lead to the most common form of congenital HL (1,2). The *SLC26A4* gene is associated with a form of non-syndromic HL (DFNB4) and Pendred syndrome, and mutations in this gene may cause up to 5-10% of hereditary HL in diverse populations (3-5). A number of different mutations in these genes have been described around the world, but certain mutations occur more frequently in particular populations. For example, the c.235delC mutation in *GJB2* and the p.H723R mutation in *SLC26A4* are the most common mutations in Korean and Japanese populations, indicating a specific ethnic bias (6-10). Aside from these nuclear genes, which are responsible for non-syndromic HL, mutations in mitochondrial genes are also involved in the development of congenital HL (11). In particular, the A1555G mutation in the 12S rRNA gene has been identified as the most prevalent mitochondrial mutation affecting HL (12).

Microarray-based technology has been applied to detect multiplex mutations for the genetic diagnosis of Mendelian disorders with profound allelic heterogeneity (13) and for analyzing panels of commonly recurring mutations (14). In terms of clinical application, this technology allows for efficient, reproducible multiplex genotyping of sequence variations at the single nucleotide level at low cost and is suitable for the genotyping of genetically heterogeneous conditions such as non-syndromic HL. In this study, we improved a genotyping microarray assay which was originally made in the previous study (15) and applied this method to the genetic diagnosis of congenital HL.

Materials and methods

Subjects. Genomic DNA from 51 subjects with non-syndromic HL, which was originally genotyped by DNA sequencing analysis, was used to validate the results obtained using the microarray. For the blind test of the microarray, 65 congenital HL patients were studied to test the efficiency of the HL genotyping microarray. All participants provided written

Correspondence to: Dr Un-Kyung Kim, Department of Biology, College of National Sciences, Kyungpook National University, Daegu 702-701, Korea
E-mail: kimuk@knu.ac.kr

Dr Sang-Heun Lee, Department of Otolaryngology-Head and Neck Surgery, College of Medicine, Kyungpook National University, Daegu 702-701, Korea
E-mail: leeshu@knu.ac.kr

*Contributed equally

Key words: hearing loss, gene, DNA chip, multiplex PCR, genetic diagnosis

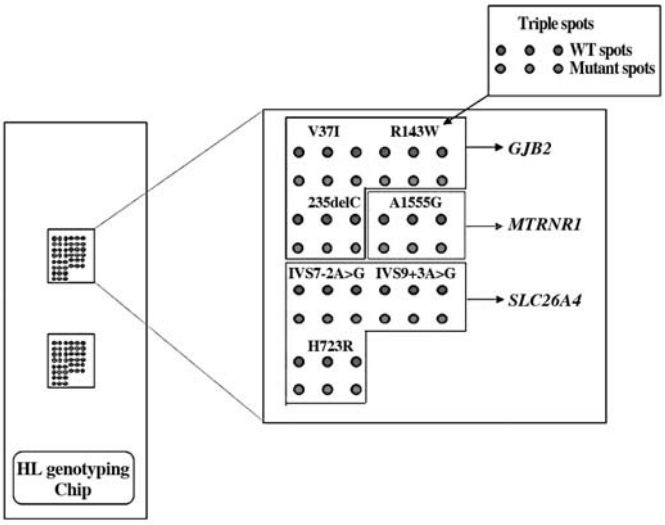

Figure 1. Two identical blocks of each oligonucleotide spot on a microarray. The amplified figure shows the organization of the cZipCode for each mutation.

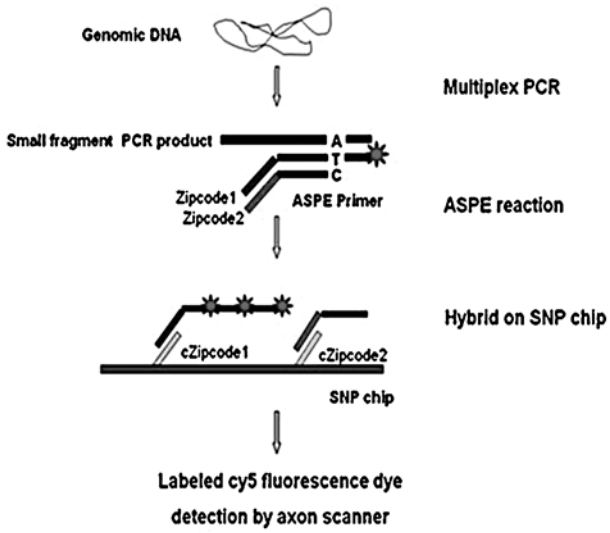

Figure 2. Outline of the multiplex ASPE reaction-based microarray assay used in this study.

informed consent of the protocol, which was approved by the Ethics Committee of Kyungpook National University Hospital.

Mutation panel and array design. Seven different mutations in the *GJB2, SLC26A4* and mitochondrial 12S rRNA genes previously identified in a Korean population were selected for the genotyping microarray: the *GJB2* p.V37I, p.R143W and c.235delC mutations; the *SLC26A4* IVS7-2A>G, IVS9+3A>G and p.H723R mutations; and the mtDNA A1555G mutation (6,7,16-18). A set of 14 probes with wild and mutant sequences was designed and printed on amine-coated glass slides (GAPSII slide cat# 40004, Corning, Acton, MA, USA) in triplicate using a MicroGrid Compact printer (BioRobotics, Apogent Discoveries, Hudson, NH, USA). The mutation probe was printed directly below its corresponding wild-type probe for each mutation, as shown in Fig. 1. Each probe contained a 25-mer complementary ZipCode sequence (cZipCode) linked to a 10-mer spacer (CAGCCAAGT) at the 5'-end. The 10-mer-spacer was included to increase the specificity of hybridization and to permit quality control of the chip fabrication.

Multiplex polymerase chain reaction (PCR). Multiplex PCRs were performed in a total volume of 25 μl, containing 90 ng genomic DNA, 2X PCR master mixes (iNtRON Biotechnology, Korea) and 0.4 pmole of each primer (IDT, Skokie, USA). The primer sequences used to amplify each mutation, the multiplex combinations of PCR primers and the expected sizes of the PCR products are listed in Table I. All amplifications were performed according to the same protocol, consisting of denaturation at 94˚C for 2 min, followed by 30 cycles of denaturation at 94˚C for 30 sec, annealing at 57˚C for 30 sec and extension at 72˚C for 30 sec, followed by a final extension at 72˚C for 5 min. Five microliters of the multiplex PCR products were separated and visualized on a 2% agarose gel.

Allele-specific primer extension (ASPE) reaction and hybridization. Allele-specific oligonucleotides, which were complementary to either the normal or mutant sequence, were designed for accurate discrimination of nucleotide changes at the designated position. Each oligonucleotide had its own unique ZipCode sequence at the 5'-end, which hybridized with the cZipCode probe on the microarray. The validated ZipCode sequences in the previous study (15) were selected for the experiment and each ZipCode sequence had a Tm of 61±2˚C and $\Delta G > -2$, and each was linked to an allele-specific oligonucleotide sequence at the 5'-end.

ASPE reactions were carried out in a total of 20 μl, including 5 μl of multiplex PCR products, 5 μl of a specific primer mix, 5 μl of cy5-dUTP, and 1 unit of i-star Taq DNA polymerase (iNtRON, Korea). The reaction mixture was incubated at 94˚C for 5 min followed by 30 cycles of 94˚C for 30 sec, 60˚C for 1 min and 72˚C for 1 min. The 20 μl of ASPE reaction products were pooled and purified using a PCR purification kit (Qiagen, Hilden, Germany) according to the protocol provided by the manufacturer. The fragments were eluted in 20 μl of H_2O.

A quantity of 20 μl of the pooled ASPE products was suspended in 50 μl of hybridization buffer (5X SSC, 0.1% SDS, 25 mg/ml Human HybMasker DNA, 25% formamide, 0.5 mg/ml poly A, 10% dextran sulfate). After heating for 5 min at 95˚C and chilling on ice, the hybridization mixture was applied to a microarray slide for 30 min at 45˚C, washed once at 50˚C in 2X SSC, 0.1% SDS for 10 min and washed four times at room temperature in 0.1X SSC for 1 min per wash.

Data analysis. The microarray was scanned in a GenePix 4000B instrument (Molecular Devices Corp., Sunnyvale, CA, USA), and the fluorescence intensities were analyzed using GenePix Pro 6.0 software. The genotype index (GI) was calculated as described previously (15,19) and the GI value was represented from the average of triplicate spots. An outline of the HL genotyping assay is presented in Fig. 2.

The primers and PCR products.

A, Multiplex combinations of PCR primers and the expected sizes of PCR products

Multiplex set	Gene	Mutation	PCR product size
Set 1 (4ea primer)	*GJB2*	V37I/235delC R143W	416 bp 311 bp
Set 2 (2ea primer)	mtRNR-1	A1555G	137 bp
Set 3 (6ea primer)	SLC26A4	IVS7-2A>G IVS9+3A>G H723R	363 bp 301 bp 227 bp

B, Target-specific primer sequences

Name	5' → 3' sequence	Gene (mutation)
GJB2-1_F1 GJB2-1_R3	TCTTTTCCAGAGCAAACCGC GATGCGGACCTTCTGGGTTT	*GJB2* (V37I/235delC)
GJB2-2_F2 GJB2-2_R2	CTGCAGCTGATCTTCGTGTC ACAAAGCAGTCCACAGTGTT	*GJB2* (R143W)
mtDNA_F1 mtDNA_R1	CGTCACCCTCCTCAAGTATACTTC GCTTTGTGTTAAGCTACACTCTGG	MTRNR1 (A1555G)
SLC-e7_F4 SLC-e7_R4	CAAAATCCCAGTCCCTATTCCTA GGTTGTTTCTTCCAGATCACACAC	*SLC26A4* (IVS7-2A>G)
SLC-e9_F3 SLC-e9_R1	GCTTGTTCTCGGAGATGCTG AGTGATGCAGTGTGTCTATTCC	*SLC26A4* (IVS9+3A>G)
SLC-e19_F1 SLC-e19_R1	CCTGGGCAATAGAATGAGACTC AAATGGAACCTTGACCCTCTTG	*SLC26A4* (H723R)

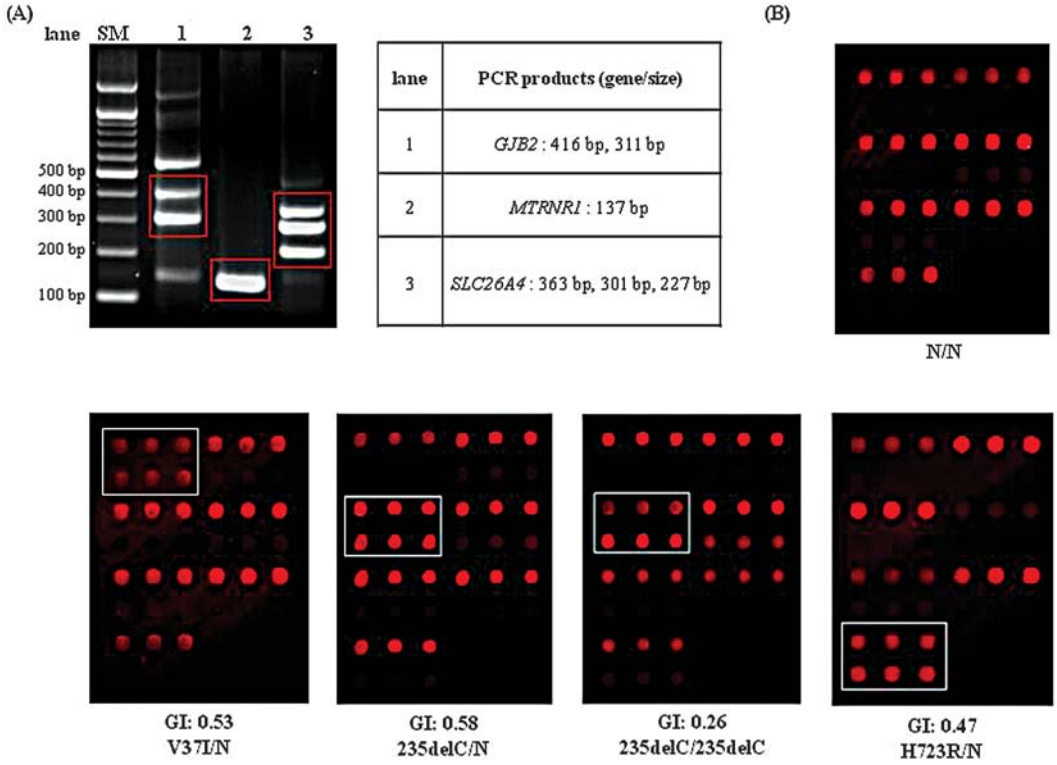

Figure 3. Examples of multiplex PCR and hybridization results. (A) Result of three different sets of multiplex PCR. SM indicates the 100-bp size marker. (B) Results of hybridization signal. The genotype indexes (GIs) calculated from the hybridization signals of mutant spots are also shown.

Table II. Comparison of results of chip screening and DNA sequencing data.

Pts.	Gender/ Age	Results of chip screening	Results of DNA sequencing
1	M/32	-	-
2	F/31	-	-
3	F/8	-	-
4	F/16	-	-
5	F/19	-	-
6	F/10	c.235delC/c.235delC	c.235delC/c.235delC
7	M/18	-	-
8	M/7	-	-
9	F/16	-	-
10	F/18	-	-
11	M/20	-	-
12	M/17	-	-
13	M/25	c.235delC/c.235delC	c.235delC/c.235delC
14	M/18	-	-
15	M/20	-	-
16	F/17	WT/c.235delC	WT/c.235delC
17	M/19	-	-
18	M/17	-	-
19	M/19	-	-
20	F/18	c.235delC/c.235delC	c.235delC/c.235delC
21	F/18	-	-
22	M/20	-	-
23	M/19	-	WT/c.176-191del16
24	M/17	-	-
25	M/8	-	-
26	M/5	-	-
27	F/6	-	-
28	F/3	-	-
29	F/31	-	-
30	F/4	-	-
31	F/19	-	-
32	F/22	-	-
33	F/19	WT/c.235delC	WT/c.235delC
34	M/20	-	-
35	M/16	-	-
36	M/17	WT/p.V37I	WT/p.V37I
37	F/10	-	-
38	M/11	-	-
39	M/11	-	-
40	F/11	-	-
41	M/6	-	-
42	F/6	-	-
43[a]	F/34	IVS7-2A>G/IVS7-2A>G	WT/IVS7-2A>G
44	F/12	WT/p.H723R	WT/p.H723R
45	M/12	-	-
46	M/12	WT/c.235delC	WT/c.235delC
47	M/15	-	-
48	M/15	WT/c.235delC	WT/c.235delC
49	F/6	-	-
50	F/8	-	-
51	M/7	-	-
52	M/14	-	-
53	M/13	-	-
54	M/4	-	-
55	F/30	-	-
56	M/30	-	-
57	F/2	-	-
58	F/33	-	-
59	M/41	-	-
60	F/40	-	-
61	M/2	-	-
62	M/2	-	-
63	M/30	-	-
64	F/30	-	-
65	F/33	-	-

[a]Unmatched sample compare with chip screening and DNA sequencing data.

Results

Seven different mutations in three genes were successfully amplified by multiplex PCR (Fig. 3A). Representative results of the HL genotyping microarray are shown in Fig. 3B. To standardize genotype assignment, we set cutoff values for each tested mutation based on the previous study to discriminate the different genotypes in the 51 subjects that had been previously genotyped by DNA sequencing (15). To evaluate the accuracy of the HL genotyping microarray, 65 HL patients for whom genotyping information was unknown were examined in a blind test by both microarray and DNA sequencing (Table II).

Mutant alleles were identified in 10 patients by microarray: three patients were homozygous for the *GJB2* c.235delC mutation; four were heterozygous for the *GJB2* c.235delC mutation; one was heterozygous for the p.V37I mutation; one was homozygous for the *SLC26A4* IVS7-2A>G mutation; and one was heterozygous for the *SLC26A4* p.H723R mutation. When the microarray results were compared with those obtained by DNA sequencing, one patient who had been genotyped as homozygous for the *SLC26A4* IVS7-2A>G mutation in the microarray was revealed to be heterozygous for this mutation by DNA sequencing, indicating a false positive signal. One subject had an additional mutation (176-191del16) in the *GJB2* gene, which was not included in the current panel. Overall, the accuracy of the microarray was calculated as 98% (64/65). Moreover, similar to the results of previous studies using DNA sequencing (7), the c.235delC mutant allele accounted for ~8% of the total alleles.

Congenital HL is one of the most common inherited disorders, and at least 50% of cases are genetic in origin (20). Early diagnosis of the genetic etiology of congenital HL expedites early intervention and aids in management decisions and genetic counseling. Moreover, studies suggest that early identification of HL helps children develop better language, cognitive and social skills when intervention occurs by six months of age, which is a significant improvement over infants diagnosed later (21). During the last 15 years, major achievements have been made in the identification of deafness genes. However, clinical applications have lagged due to the genetic heterogeneity of the disease. To date, conventional gel-based and direct sequencing techniques have been used to screen known deafness genes, but extensive screening of all known genes involved in the development of deafness is very expensive and time-consuming. As certain mutations have been shown to be recurrent in populations, a screening strategy focusing on frequently recurring mutations could be a breakthrough for clinical applications.

Microarray approaches have been used extensively for analyzing the expression levels of thousands of genes and for performing multiplex genotyping of SNPs and large-scale mutation screening. For HL, several studies using microarrays have proposed high-throughput techniques for screening mutations in deafness genes and have demonstrated accurate and reliable results (19,22,23). As some mutations on the mutation panels have only been identified in Caucasians or in other specific populations, genetic screening based on the mutation spectrum of a specific population may be an appropriate and effective strategy for detecting mutations in causative genes.

As a first step in the establishment of efficient and rapid genetic screening in Koreans, we developed and tested an HL genotyping microarray for simultaneous, multi-gene mutation screening of deaf patients. Since most genetic studies in the Korean population have been focused on the *GJB2, SLC26A4* and mitochondrial genes, we selected seven different mutations in these genes based on their high frequencies in the Korean population (6-8,10,16-18). The carrier frequency of the *GJB2* gene is estimated to be 3% in the Korean population, and the p.V37I, c.235delC and p.R143W mutations were frequently found in Korean patients (6,7,17). The *SLC26A4* gene, which is associated with enlarged vestibular aquaducts (EVA), is also a common causative gene of HL. Park *et al* (2005) demonstrated that 20 (83%) out of 24 probands with *SLC26A4* mutations had at least one of three recurrent mutations (p.H723R, IVS7-2A>G or IVS9+3A>G) (15,18,24,25). In addition, the mtDNA A1555G mutation has been identified as the most prevalent mitochondrial mutation associated with HL in the Korean population. No mutations were identified in the other tRNA genes associated with non-syndromic HL (16).

The results of the tests for validation of the current version of HL genotyping microarray were fully concordant with those of sequencing analysis. Furthermore, the blind test of the genotyping microarray detected four different mutations in 10 out of 65 patients. A mutation in one subject was subsequently identified as a false positive. The most frequent mutations, c.235delC, IVS7-2A>G and p.H723R, were identified only in the blind testing. The frequency of *GJB2* mutations detected by the genotyping microarray was 4% (3/65), similar to the results obtained by Park *et al* (7). Our results suggest that this HL genotyping microarray will be useful in clinical applications for the genetic diagnosis of HL.

There are some limitations of this study. First, we need to include a wider range of different genotyping combinations. Most of the mutations in this study were frequently found in Korean patients affected by HL. Recently, a number of novel mutations were identified in the same population studied here, and some of the mutations, such as p.T86R and p.T123N in *GJB2* and p.M147V and p.T721M in *SLC26A4*, were recurrent. Second, a larger number of patient samples of varied quality should be analyzed to ensure the accuracy of the microarray. For example, it is important to note that genomic DNA from newborns is primarily extracted from buccal swabs of the cheek, which suggests that the DNA concentration is low. Therefore, although more mutations will be included in the content of microarray, we also need to optimize the conditions of the multiplex PCR to amplify all of the products with similar accuracy.

In summary, we successfully designed a chip-based genotyping strategy according to the principles of the single nucleotide ASPE reaction and were able to simultaneously screen for seven mutations in three causative genes of HL. This chip-based assay will provide a relatively rapid and cost-effective means of detecting mutations for clinical genetic diagnosis of HL.

Acknowledgements

This work was supported by Biomedical Research Institute grant, Kyungpook National University Hospital (2009) (S.H. Lee).

References

1. Smith RJ, Bale JF Jr and White KR: Sensorineural hearing loss in children. Lancet 365: 879-890, 2005.
2. Van Camp G, Willems PJ and Smith RJ: Nonsyndromic hearing impairment: unparalleled heterogeneity. Am J Hum Genet 60: 758-764, 1997.
3. Fraser GR: Association of Congenital Deafness with Goitre (Pendred's Syndrome) a study of 207 families. Ann Hum Genet 28: 201-249, 1965.
4. Reardon W, Coffey R, Phelps PD, *et al*: Pendred syndrome - 100 years of underascertainment? Q J Med 90: 443-447, 1997.
5. Tsukamoto K, Suzuki H, Harada D, Namba A, Abe S and Usami S: Distribution and frequencies of PDS (SLC26A4) mutations in Pendred syndrome and nonsyndromic hearing loss associated with enlarged vestibular aqueduct: a unique spectrum of mutations in Japanese. Eur J Hum Genet 11: 916-922, 2003.
6. Han SH, Park HJ, Kang EJ, *et al*: Carrier frequency of GJB2 (connexin-26) mutations causing inherited deafness in the Korean population. J Hum Genet 53: 1022-1028, 2008.
7. Park HJ, Hahn SH, Chun YM, Park K and Kim HN: Connexin26 mutations associated with nonsyndromic hearing loss. Laryngoscope 110: 1535-1538, 2000.
8. Park HJ, Shaukat S, Liu XZ, *et al*: Origins and frequencies of SLC26A4 (PDS) mutations in east and south Asians: global implications for the epidemiology of deafness. J Med Genet 40: 242-248, 2003.
9. Usami S, Wagatsuma M, Fukuoka H, *et al*: The responsible genes in Japanese deafness patients and clinical application using Invader assay. Acta Otolaryngol 128: 446-454, 2008.
10. Yan D, Park HJ, Ouyang XM, *et al*: Evidence of a founder effect for the 235delC mutation of GJB2 (connexin 26) in east Asians. Hum Genet 114: 44-50, 2003.

11. Kokotas H, Petersen MB and Willems PJ: Mitochondrial deafness. Clin Genet 71: 379-391, 2007.
12. Usami S, Abe S, Akita J, *et al*: Prevalence of mitochondrial gene mutations among hearing impaired patients. J Med Genet 37: 38-40, 2000.
13. Estivill X, Bancells C and Ramos C: Geographic distribution and regional origin of 272 cystic fibrosis mutations in European populations. The Biomed CF Mutation Analysis Consortium. Hum Mutat 10: 135-154, 1997.
14. Peltonen L, Jalanko A and Varilo T: Molecular genetics of the Finnish disease heritage. Hum Mol Genet 8: 1913-1923, 1999.
15. Choi SY, Kim YE, Ahn DB, *et al*: Construction of a DNA chip for screening of genetic hearing loss. Clin Exp Otorhinolaryngol 2: 44-47, 2009.
16. Bae JW, Lee KY, Choi SY, Lee SH, Park HJ and Kim UK: Molecular analysis of mitochondrial gene mutations in Korean patients with nonsyndromic hearing loss. Int J Mol Med 22: 175-180, 2008.
17. Lee KY, Choi SY, Bae JW, *et al*: Molecular analysis of the GJB2, GJB6 and SLC26A4 genes in Korean deafness patients. Int J Pediatr Otorhinolaryngol 72: 1301-1309, 2008.
18. Park HJ, Lee SJ, Jin HS, *et al*: Genetic basis of hearing loss associated with enlarged vestibular aqueducts in Koreans. Clin Genet 67: 160-165, 2005.
19. Siemering K, Manji SS, Hutchison WM, Du Sart D, Phelan D and Dahl HH: Detection of mutations in genes associated with hearing loss using a microarray-based approach. J Mol Diagn 8: 483-489; quiz 528, 2006.
20. Morton NE: Genetic epidemiology of hearing impairment. Ann NY Acad Sci 630: 16-31, 1991.
21. Yoshinaga-Itano C, Sedey AL, Coulter DK and Mehl AL: Language of early- and later-identified children with hearing loss. Pediatrics 102: 1161-1171, 1998.
22. Cremers FP, Kimberling WJ, Kulm M, *et al*: Development of a genotyping microarray for Usher syndrome. J Med Genet 44: 153-160, 2007.
23. Gardner P, Oitmaa E, Messner A, Hoefsloot L, Metspalu A and Schrijver I: Simultaneous multigene mutation detection in patients with sensorineural hearing loss through a novel diagnostic microarray: a new approach for newborn screening follow-up. Pediatrics 118: 985-994, 2006.
24. Cho MA, Jeong SJ, Eom SM, *et al*: The H723R mutation in the PDS/SLC26A4 gene is associated with typical Pendred syndrome in Korean patients. Endocrine 30: 237-243, 2006.
25. Kim S, Song DG, Bae JW, *et al*: A family of H723R mutation for SLC26A4 associated with enlarged vestibular aqueduct syndrome. Clin Exp Otorhinolaryngol 2: 100-102, 2009.