SPANDIDOS PUBLICATIONS

ONCOLOGY REPORTS 42: 1133-1140, 2019

A germline *MBD4* mutation was identified in a patient with colorectal oligopolyposis and early-onset cancer: A case report

KOHJI TANAKAYA[1*], KENSUKE KUMAMOTO[2,3*], YUHKI TADA[4,8*], HIDETAKA EGUCHI[2,5], KEIICHIRO ISHIBASHI[2], HITOSHI IDANI[6], TETSUHIKO TACHIKAWA[7], KIWAMU AKAGI[7], YASUSHI OKAZAKI[5] and HIDEYUKI ISHIDA[2]

[1]Department of Surgery, National Hospital Organization Iwakuni Clinical Center, Iwakuni, Yamaguchi 740-8510; [2]Department of Digestive Tract and General Surgery, Saitama Medical Center, Saitama Medical University, Kawagoe, Saitama 350-8550; [3]Department of Gastroenterological Surgery, Faculty of Medicine, Kagawa University, Miki-cho, Kagawa 761-0793; [4]Division of Translational Research, Research Center for Genomic Medicine, Saitama Medical University, Hidaka, Saitama 350-1298; [5]Intractable Disease Research Center, Graduate School of Medicine, Juntendo University, Tokyo 114-8431; [6]Department of Surgery, Hiroshima City Hiroshima Citizens Hospital, Hiroshima, Hiroshima 730-8518; [7]Division of Molecular Diagnosis and Cancer Prevention, Saitama Cancer Center, Saitama 362-0806, Japan

Received February 12, 2019; Accepted July 9, 2019

DOI: 10.3892/or.2019.7239

Abstract. A 42-year-old woman presented with ~30 adenomatous polyps of the left sided-colon with early rectosigmoid cancer. The patient had no previous medical history and no familial history of inherited colorectal disease. No germline gene mutations associated with colorectal adenomatous polyposis, including APC regulator of WNT signaling pathway, mutY DNA glycosylase, DNA polymerase-ε, catalytic subunit, DNA polymerase δ1, catalytic subunit, and mismatch repair genes, were detected via germline genetic testing. A heterozygous germline mutation in methyl-CpG binding domain 4, DNA glycosylase (*MBD4*), c.217C>T/p.Gln73*, which resulted in the generation of a stop codon, was identified by genetic analyses including whole-exome sequencing. Immunohistochemical staining analysis revealed that the expression of MBD4 protein was absent in the cancer tissue, while it was expressed in the normal epithelium. Sequencing and copy-number analyses demonstrated the loss of the remaining allele of *MBD4* in the cancer tissue. Furthermore, somatic mutation signature analysis showed preferential transition of cytosine to thymine residues at CpG dinucleotides in cancer tissues. Although it has been previously reported that germline missense mutations and somatic mutations of *MBD4* are associated with the development of colorectal cancer, this is the first report, to the best of our knowledge, in which a germline nonsense mutation of the *MBD4* gene has been identified in an early-onset colorectal cancer patient with oligopolyposis.

Correspondence to: Professor Hideyuki Ishida, Department of Digestive Tract and General Surgery, Saitama Medical Center, Saitama Medical University, 1981 Kamoda, Kawagoe, Saitama 350-8550, Japan
E-mail: 05hishi@saitama-med.ac.jp

Present address: [8]Technology and Development Team for Mammalian Genome Dynamics, RIKEN BioResource Center, Tsukuba, Ibaraki 305-0074, Japan

[*]Contributed equally

Key words: methyl-CpG binding domain 4, DNA glycosylase, oligopolyposis, colorectal cancer, germline mutation

Introduction

Colorectal adenomatous polyposis syndromes are characterized by the occurrence of dozens to thousands of adenomatous polyps, which, if not removed early, invariably result in colorectal cancer (CRC). Among adenomatous polyposis syndromes, >100 polyps clinically lead to a diagnosis of familial adenomatous polyposis (FAP) (1). When the number of polyps is <100 colorectal adenomas (oligopolyposis) (2), several types of adenomatous polyposis, including attenuated FAP, mutY DNA glycosylase (*MUTYH*)-associated polyposis (MAP), polymerase proofreading-associated polyposis (PPAP) and a subtype of Lynch syndrome (LS), are considered to be candidates for differential diagnosis. However, it may be difficult to make an accurate diagnosis without germline genetic testing of APC regulator of WNT signaling pathway (*APC*), *MUTYH*, DNA polymerase-ε, catalytic subunit (*POLE*), DNA polymerase δ1, catalytic subunit (*POLD1*), mutL homolog 1 (*MLH1*), mutS homolog 2 (*MSH2*), mutS homolog 6 (*MSH6*) and PMS1 homolog 2, mismatch repair system component (*PMS2*) genes. A previous report (1) showed that the frequency of *APC* and *MUTYH* mutations was 8.9% (376/4223 individuals) and 6.4% (270/4223 individuals), respectively, in patients with oligopolyposis. The frequency of *POLE* and *POLD1* mutations was reported to be 1.5% (4/266 individuals) and 0.8% (2/266 individuals), respectively, in patients with

oligopolyposis (3). These data indicated that there are a small number of cases leading to a definite diagnosis. Therefore, most cases of oligopolyposis are likely to be caused by other genetic events.

The identification of additional genetic variants is necessary for understanding the molecular mechanisms underlying the pathogenesis of adenomatous polyposis and early-onset CRC. Novel causative genes associated with oligopolyposis have been reported with recent progress in genetic analysis instruments, including next generation sequencing (NGS), since the identification of *POLE* and *POLD1* in 2013 (4). POLE and POLD1 are the catalytic and proofreading subunit of the polymerases ε (Polε) and δ (Polδ), respectively. Polε is responsible for the synthesis of the leading strand during DNA replication and is involved in the maintenance of replication fidelity (5). Polδ is considered to have functions related to the mismatch and base excision repair pathways (6). Weren *et al* (7) reported a homozygous nonsense mutation in the base excision repair gene nth like DNA glycosylase 1 (*NTHL1*) (c.268C>T encoding p.Q90*) in three unrelated families with recessive inheritance of the adenomatous polyposis phenotype and cancer progression. Therefore, biallelic germline truncating mutations in the *NTHL1* gene may be responsible for recessive adenomatous polyposis and CRC predisposition syndrome. In addition to these DNA repair-related genes, biallelic mutS homolog 3 (*MSH3*) germline mutations have been identified as a recessive subtype of colorectal adenomatous polyposis (8). Other reports (9,10) have demonstrated that the germline deletion of focadhesin is associated with adenomatous polyposis and CRC. Rare loss-of-function germline mutations in three promising candidate genes (desmocollin 2, piezo type mechanosensitive ion channel component 1 and zinc finger SWIM-type containing 7) have been identified in individuals with unexplained adenomatous polyposis from the analysis of whole-exome sequencing (WES) data (11). Although the frequency of these germline mutations in newly identified genes may be very low, unlike those in *APC* and *MUTYH*, the identification of causative genes related to colorectal adenomatous polyposis and cancer will contribute to the clinical management of individuals and their relatives, leading to a decreased risk of cancer.

The current report presents a case of early-onset CRC with oligopolyposis without germline mutations in well-established genes associated with adenomatous polyposis syndromes. A novel truncating germline mutation in methyl-CpG binding domain 4, DNA glycosylase (*MBD4*), c.217c>T/p.Q73*, was identified in a patient with CRC and oligopolyposis. A role for *MBD4* germline mutations in cancer predisposition was hypothesized previously (12). To the best of our knowledge, this is the first report in which a germline nonsense mutation in the *MBD4* gene was identified in an early-onset CRC patient with oligopolyposis.

Case report

A 42-year-old Japanese female presented with a positive screening test result on a fecal occult blood test, and was admitted to the Iwakuni Clinical Center in May 2014. Colonoscopy showed a 7-mm depressed-type lesion in the rectosigmoid and ~30 polyps located around the splenic flexure of the colon. No gastric or duodenal polyps were observed. Laparoscopic high-anterior resection with D3 lymph node dissection was performed at Hiroshima City Hiroshima Citizens Hospital in July 2014. A pathological examination of the resected specimen showed moderately-differentiated tubular adenocarcinoma invading the colonic submucosal layer with no lymph node metastasis [pT1, N0, M0, stage I according to the Union for International Cancer Control Tumor-Node-Metastasis classification (7th edition) (13)]. The colon polyps were removed endoscopically. The pathological finding of the polyps was tubular adenoma. The patient was followed up for 5 years post-surgery; she had some polyps located around the splenic flexure, which were resected annually.

Regarding the family history of the patient, she had a brother with chronic hepatitis B and hepatocellular carcinoma (HCC) who succumbed at 36 years of age, and her mother succumbed to respiratory disease at 64 years of age (Fig. 1). Two paternal aunts and one maternal uncle succumbed in infancy. There is no family history of colorectal cancer.

Ethical considerations. Informed consent was obtained from the patient. This research was approved by the Institutional Review Board at Saitama Medical Center, Saitama Medical University (no. 747) and the Ethics Committee at Saitama Medical University, and was conducted according to the guidelines put forth in the Declaration of Helsinki.

Germline sequence analysis. Genomic DNA was extracted from whole blood from the patient using QIAamp DNeasy blood and tissue DNA extraction kits (Qiagen, Inc.), according to the manufacturer's protocol. Mutation analysis of all the coding exons and intron-exon boundaries of 19 known genes [bone morphogenetic protein receptor type 1A, cadherin 1, epithelial cell adhesion molecule, *MBD4, MLH1,* mutL homolog 3, *MSH2, MSH3, MSH6, MUTYH,* PMS1 homolog 1, mismatch repair system component, *PMS2, POLD1, POLE,* phosphatase and tensin homolog, *SMAD4,* serine/threonine kinase 11, transforming growth factor-β receptor 2 and tumor protein p53 (*TP53*)] and the entire genomic sequence of *APC* was performed by massive parallel sequencing analysis with a MiSeq sequencer (Illumina, Inc.), as described previously (14). WES analysis was conducted at a private laboratory, Novogene Co., Ltd. via Chemical Dojin Co., Ltd., as follows: The Agilent SureSelect Human All Exon V6 (58 m) kit (Agilent Technologies Inc.) was used for the DNA target enrichment, followed by sequencing with an Illumina HiSeq4000 sequencer (Illumina, Inc.).

Immunohistochemical (IHC) analysis of the cancer tissue. IHC of four mismatch repair (MMR) proteins (MLH1, MSH2, MSH6 and PMS2) was performed on paraffin-embedded rectosigmoid adenocarcinoma tissue (4 μm), which were fixed with 10% formalin for 48 h at room temperature, using a Staining Automat (BOND III; Leica Biosystems), according to the manufacturer's protocol. The primary antibodies used for detecting the MMR proteins were as follows: Anti-human (h)MLH1 antibody (clone ES05; Leica Biosystems; cat. no. MLH1-L-CE; 1:100), anti-hMSH2 antibody (clone 79H11; Leica Biosystems; cat. no. MSH2-612-L-CE; 1:100), anti-hMSH6 antibody

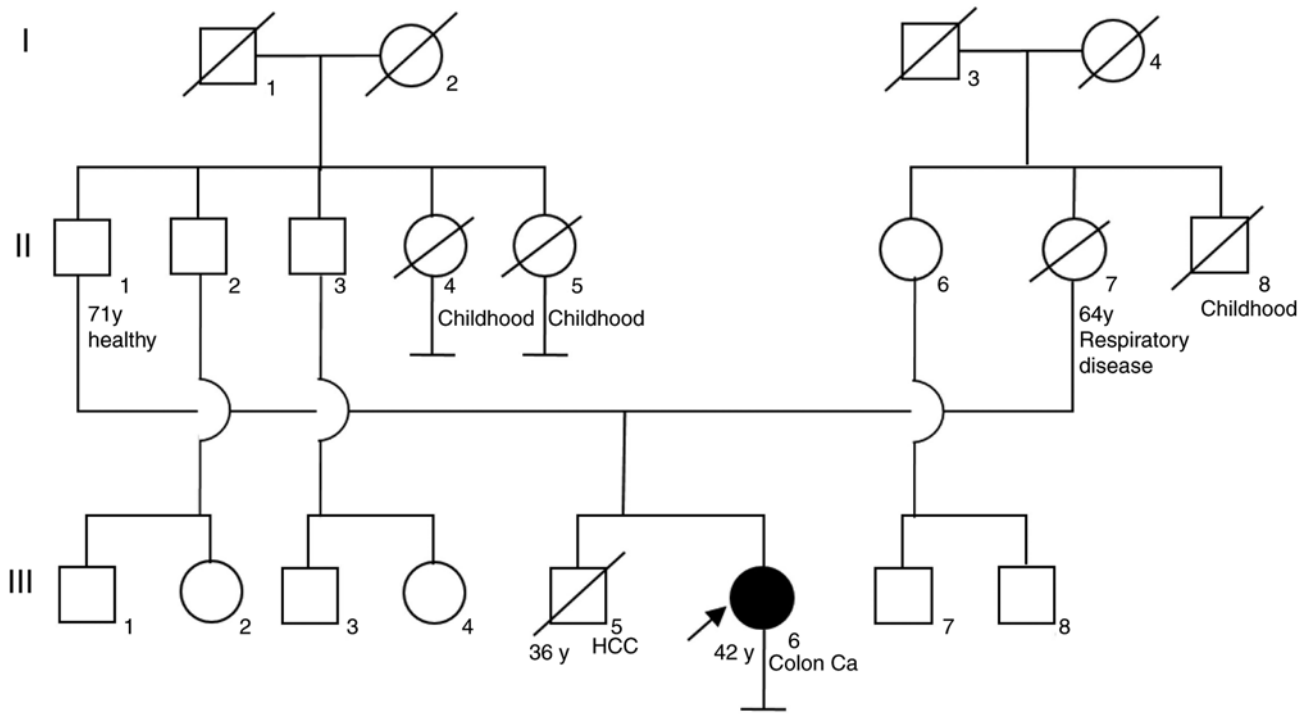

Figure 1. Pedigree of the patient. Circles, females; squares, males. HCC, hepatocellular carcinoma; Ca, cancer.

(clone PU29; Leica Biosystems; cat. no. MSH6-L-CE; 1:70) and anti-hPMS2 antibody (clone M0R4G; Leica Biosystems; cat. no. PMS2-L-CE; 1:40).

MBD4 expression in both cancer cells and normal epithelial cells in paraffin-embedded tissue from resected specimens was examined using anti-MBD4 antibody (cat. no. ab84754; Abcam; 1:200). Sections were deparaffinized in xylene and rehydrated through graded ethanol (two changes of 100% ethanol for 3 min each, 95 and 80% ethanol for 1 min each). After the sections were rinsed in PBS, endogenous peroxidase was blocked with 0.3% H_2O_2 in methanol for 30 min. Antigens were retrieved by autoclaving sections on slides in 0.01 m pH 6.0 citrate buffer for 10 min. After being rinsed in PBS, the sections were incubated with the primary antibody overnight at 4˚C. A further wash in PBS was followed by treatment with peroxidase-labeled polymer conjugated to goat anti-rabbit immunoglobulins (Envision + kit; cat. no. K4008; Dako; Agilent Technologies, Inc.) as the secondary antibody for 30 min at room temperature. The staining was visualized with diaminobenzidine for 5 min at room temperature, followed by counterstaining with hematoxylin for 5 min at room temperature. The color developing effect was observed with a light microscope with an Olympus DP20 micrographic system (magnification, x200; Olympus Corporation).

Sanger sequence analysis of the MBD4 gene. Sanger sequencing of exon 2 of the *MBD4* gene was conducted using the following primer sets: MBD4_Exon2_Sanger_F: 5'-CCT GCTATGCTCCCACTACC-3' and MBD4_Exon2_Sanger_R: 5'-GGTTCCTGCATTGTCATGG-3'. Amplification of the DNA fragment was conducted using AmpliTaqGold 360 Master mix (Thermo Fisher Scientific, Inc.) according to the manufacturer's protocol. After 1.5% agarose gel electrophoresis, the amplified fragment was excised and the DNA fragment was extracted using the NucleoSpin Gel and PCR Clean-up kit (MACHEREY-NAGEL GmbH & Co. KG). The sequencing reaction was conducted using the primers, MBD4_Exon2_Sanger_F or MBD4_Exon2_Sanger_R, and the BigDye Terminator v3.1 Cycle Sequencing kit (Thermo Fisher Scientific, Inc.), according to the manufacturer's recommendations, and was run on the 3500 Genetic Analyzer (Thermo Fisher Scientific, Inc.).

Somatic mutation analysis. Formalin-fixed paraffin-embedded (FFPE) tissue specimens of 5-μm thickness were mounted on a glass slide with Teonex Q51 polyethylene naphthalate film (DuPont). After being de-paraffinized with Lemozol A (Wako Pure Chemical Industries, Ltd.), according to the manufacturer's recommendations, the tissue specimens were stained with methyl green (Wako Pure Chemical Industries, Ltd.). The cancerous cells were selectively collected using the laser-microdissection system LMD-7000 (Leica Microsystems GmbH). The DNA was extracted from the cells using a QIAamp DNA FFPE kit (Qiagen, Inc.). Since the amount of DNA obtained was limited, whole-genome amplification (WGA) of the prepared DNA was subsequently conducted using a GenomePlex Complete WGA kit (Sigma-Aldrich; Merck KGaA), according to the manufacturer's protocol. The amplified DNA was subjected to the WES analysis as stated above at Novogene Co., Ltd. via Chemical Dojin Co., Ltd.

Copy number variation analysis of the MBD4 gene. Copy number variation analysis was conducted using TaqMan Copy Number Assays (Thermo Fisher Scientific, Inc.), Hs02869836_cn and Hs01541743_cn, designed on exons 8 and 2 of the

MBD4 gene, respectively. As for the reference, TaqMan Copy Number Reference Assay Telomerase Reverse Transcriptase was used. Quantitative PCR (qPCR) was conducted using the indicated TaqMan Copy Number Assays and TaqMan Genotyping Master Mix (Thermo Fisher Scientific, Inc.), according to the manufacturer's recommendations, and the Applied Biosystems 7900HT Fast Real-Time PCR System (Thermo Fisher Scientific, Inc.), according to the manufacturer's recommendations. The measurement was conducted in quintuplicate and the obtained data were analyzed using CopyCaller® Software v2.0 (Thermo Fisher Scientific, Inc.).

Bioinformatics analysis of the mutational signatures. Obtained Fastq files generated from the normal and cancer tissues were subjected to bioinformatics analyses using various pipelines as described below. As for pre-processing, Burrows-Wheeler Aligner (15) was used for mapping to the reference genome (hg19), duplication marking was performed with Picard (https://broadinstitute.github.io/picard/), and Genome Analysis Toolkit (16) was used for local realignment around indels and base quality score recalibration. Detection of somatic mutation was conducted using MuTect v1.1.7 (17). The somatic mutations were then referenced against the Catalogue Of Somatic Mutations In Cancer (COSMIC) version 77 (https://cancer.sanger.ac.uk/cosmic), as only reliable somatic mutations would already be registered in COSMIC. Finally, the selected 7,915 somatic mutations were subjected to mutational signature analysis. Mutational signatures, patterns in the occurrence of somatic single-nucleotide variants that reflect underlying mutational processes, were analyzed as described by Gehring *et al* (18) using the package SomaticSignatures version 2.8.4 (https://bioconductor.org/packages/release/bioc/html/SomaticSignatures.html) (18) and the R language and environment for statistical computing version 3.3.2 (19).

Statistical analysis. The statistical significance of copy number difference was assessed using the inbuilt algorithm of the CopyCaller® Software v2.0, according to the manufacturer's user guide (http://tools.thermofisher.com/content/sfs/manuals/cms_062369.pdf). $P<0.05$ was considered as to indicate a statistically significant difference.

Results. Since the expression of all of the MMR proteins, MLH1, MSH2, MSH6 and PMS2, was detected in cancer cells by IHC staining (Fig. S1), a set of gene mutations that are related to hereditary CRC were examined. Panel sequencing analysis of the 20 genes identified a germline nonsense mutation in *MBD4*, c.217C>T/p.Q73* (dbSNP:rs148098584) (Fig. 2; upper panel). The frequency of the variant was extremely low; the minor allele frequency (MAF) at the Exome Aggregation Consortium (release 1.0; http://exac.broadinstitute.org/) was 8.237×10^{-6}, while MAF=0.0002 was reported by the Integrative Japanese Genome Variation Database 2KJPN (20), a database of genomic variations obtained from whole-genome sequencing of 2,049 healthy individuals in Japanese populations. In order to explore the possible involvement of causative genes other than those on the panel, WES was also conducted. As a result, the nonsense mutation of the *MBD4* gene was confirmed (data not shown), while no other candidate gene

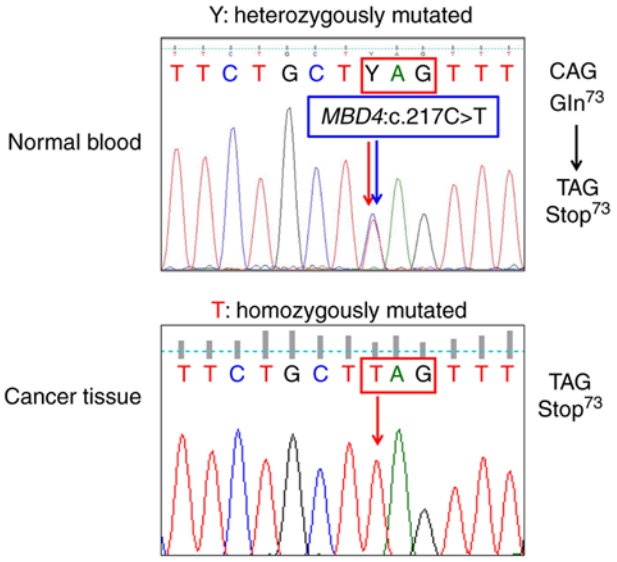

Figure 2. Sequencing analysis of exon 2 of the *MBD4* gene. *MBD4*, methyl-CpG binding domain 4, DNA glycosylase.

mutations were identified with an established pathogenicity (Class 4/5) as registered in the ClinVar database 20171029 hg19 (https://www.ncbi.nlm.nih.gov/clinvar/), or truncating mutations in genes related to the development of epithelial cancer types, including colon cancer.

MBD4 expression was lost in the cancer tissues according to the IHC analysis, while it was expressed clearly in the normal epithelial cells (Fig. 3, upper panel). Sanger sequencing analysis also confirmed a homozygous mutation of c.217c>T/p.Q73* in the *MBD4* gene in the cancer tissue (Fig. 2; lower panel), indicating that inactivation of the wild-type allele of the *MBD4* gene had occurred in the cancer tissue. To confirm this, a copy-number analysis of the *MBD4* gene was performed using qPCR-based copy number detection. It was found that both of the primer/probe sets designed within exons 2 and 8 demonstrated one-allele deletion, confirming the occurrence of the loss-of heterozygosity around the *MBD4* gene in the cancer tissue (Fig. 3, lower panel). The somatic mutation signatures of the cancer were then analyzed, to assess the possible involvement of the loss of the MBD4 in the development of the cancer. The results demonstrated that the transitions of cytosine to thymine preferentially occurred at CpG sites in the cancer tissues (Fig. 4).

Discussion

The present study identified a germline mutation in the *MBD4* gene in a patient with ~30 adenomatous polyps at the left-sided colon and early rectosigmoid cancer. When >100 adenomatous polyps are observed in an individual, clinicians generally reach a diagnosis of FAP. However, a diagnosis of oligopolyposis (<100 polyps) and early-onset CRC is often speculated upon, regardless of the presence of family history. Firstly, attenuated FAP and MAP may be candidates for differential diagnosis; and secondly, the possibility of PPAP or LS may be considered in individuals with early-onset CRC and oligopolyposis. In the present case, the patient had no previous medical history and no family history of hereditary CRC syndrome. Germline

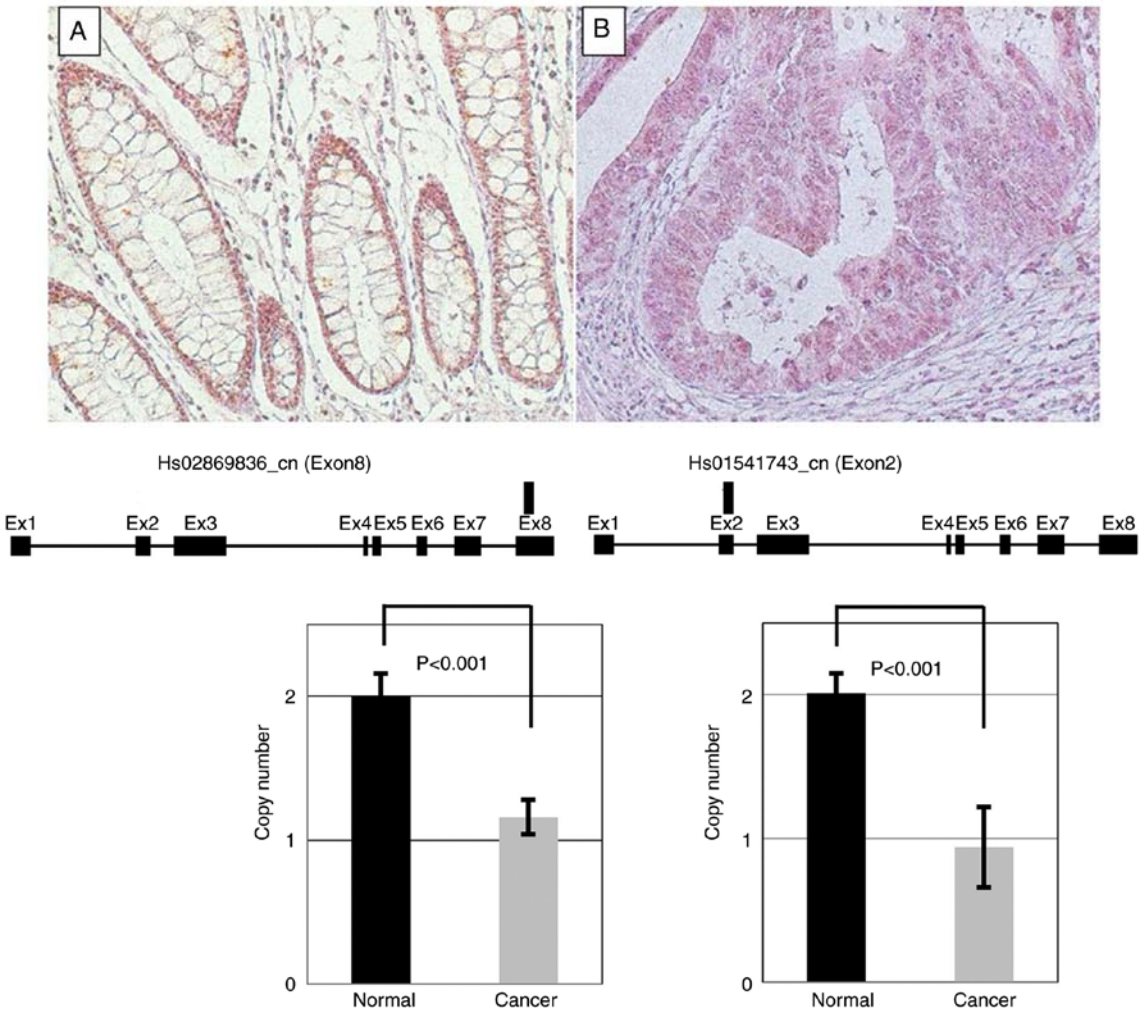

Figure 3. Loss of MBD4 in cancer tissues from the patient. (Upper) Immunohistochemical staining of the MBD4 protein expression in normal mucosa (A) and cancer tissue (B) of the patient (magnification, x200). (Lower) Comparison of the copy number of the *MBD4* gene between normal (blood cells) and cancer tissue. Mean copy numbers are shown with the error bars representing SD. Left, primer/probe sets in exon 8. Right, primer/probe sets in exon 2. Locations of the primer/probe sets are illustrated as filled vertical rectangles beyond the organization of the MBD4 gene. *MBD4*, methyl-CpG binding domain 4, DNA glycosylase.

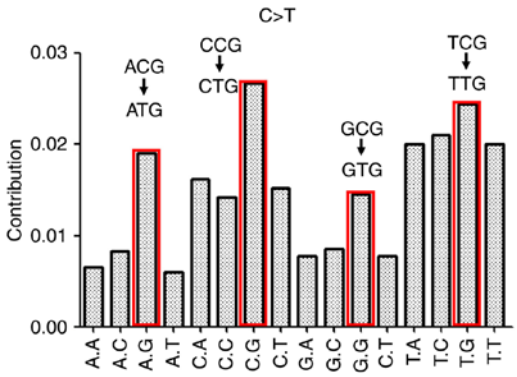

Figure 4. Mutation signatures of cytosine to thymine transitions in the cancer tissue. Cytosine residues in the CpG dinucleotides are marked with the red rectangles.

mutation analysis was performed in a set of hereditary CRC-related 20 genes, as reported previously (14). Of these 20 genes, only a nonsense mutation in *MBD4* (c.217C>T/p.Q73*) was detected as a pathogenic mutation. The loss of function of MBD4 has already been shown to promote colorectal carcinogenesis (21). MBD4 is a methyl-CpG binding DNA glycosylase involved in the repair of mismatches arising from the deamination of methyl-cytosine in mammalian cells, and catalyzes the removal of thymine and uracil paired with guanine within CpG sites (22). Moreover, MBD4 is a binding partner of the MLH1 protein and modulates the levels of core MMR proteins (23). *MBD4* is frequently mutated in hereditary and sporadic CRC with deficient MMR and microsatellite instability (21,24-27). The most frequent mutations in CRC occur via frameshifts in the poly-adenine tract of ten consecutive adenine nucleotides (A_{10}) at codons 301-310 within exon 3, thereby disrupting downstream sequences, including the glycosylase domain. These truncated MBD4 proteins lose the ability to interact with MLH1 and may act in a dominant negative fashion, against the glycosylase activity of the wild-type protein produced from the unaffected allele (28), though this mechanism was not applicable to the present case because the truncated MBD4 was very short. Tricarico *et al* (21) reported that germline missense variants in *MBD4* were detected in 11/242 (4.5%) patients with hereditary CRC (meeting the

Amsterdam or Bethesda criteria) and 6/49 (12.2%) patients with sporadic CRC. Thus far, to the best of our knowledge, no germline *MBD4* nonsense mutations have been identified in patients with CRC.

A role for *MBD4* germline mutations in cancer predisposition was hypothesized previously (12). However, *MBD4* knock-out mouse models have been shown to have no change in the rate of spontaneous tumorigenesis when compared to wild-type mice, except in *APC*-deficient backgrounds (29,30). Although *MBD4* inactivation alone may not be sufficient to initiate tumorigenesis, the $MBD^{-/-}/APC^{1638N/+}$ double mutant displayed a 10-fold increase in the number of microadenomas as compared with the single $APC^{1638N/+}$ mutant (30). These results indicate that the loss of MBD4 function can modify the tumor distribution in the gastrointestinal tract, and has a significant effect on tumor development. In the present case, oligopolyposis was observed in the left-sided colon. Based on the *MBD4* knock-out mouse experiments, the loss of MBD4 alone does not affect the pathogenesis of polyposis. Therefore, additional genetic events, including somatic *APC* mosaicism (31), may have led to the oligopolyposis, although it was not possible to analyze somatic gene variants in these polyps in the present study. It has been reported that mutations causing a loss of normal MBD4 function increase the rate of genome-wide C:G>T:A transitions at CpG sites, leading to cancer initiation via genomic instability (29,30). The *APC* mutations in the $MBD4^{-/-}/APC^{1638N/+}$ tumors showed that the increase in the incidence of somatic *APC* mutations was preferentially caused by an increase in C:G>T:A mutations at CpG sites (30). In the present study, it was found that the transitions of cytosine to thymine preferentially occurred at CpG sites in the cancer tissues. Based on these lines of evidence, it may be speculated that the loss of MBD4 function may increase the probability of CpG mutations in the coding region of other cancer-related genes. Mutations caused by C:G>T:A transitions in the context of CpG sites are known to be the most prevalent mutational signatures in the majority of cancer types, including CRC (32). Approximately 50% of somatic *TP53* mutations in CRC are composed of C:G>T:A transitions at CpG sites (33,34), suggesting that MBD4 inactivation might have a significant impact on *TP53* mutations.

The mechanism of carcinogenesis in polyposis is considered to be the accumulation of genetic mutations, so called 'adenoma-carcinoma sequences' (35). In the present case, it was not possible to clarify the morphological and genetic relationship between the oligopolyposis and depressed-type early rectosigmoid cancer, since a depressed-type cancer generally occurs via *de novo* pathway. Kudo *et al* (36) reported that depressed type lesions were observed in patients with FAP. Therefore, the genetic background of the cancer tissue may be identical to that of the polyps even if a morphological difference is observed. Further identification of a germline nonsense mutation in the *MBD4* gene in a patient with colonic oligopolyposis and early CRC will be required to verify this genetic pathogenesis in the future.

The brother of the patient in the present report had been infected with hepatitis B virus, and succumbed to HCC in his late thirties. The age of the deceased was unusually young compared with the average age at mortality of Japanese HCC patients. Since his HCC was diagnosed at stage 4 and no surgical treatment was conducted, no tissue specimens were obtained. A previous report (37) showed that reduced *MBD4* expression was associated with malignant progression in HCC due to frequent C:G>T:A transitions in tumor suppressor genes, including *TP53*. Although it is not possible to know whether the brother of the present patient had germline and somatic mutations of the *MBD4* gene, there may be the possibility of him having been a genetic carrier from the perspective of the characteristic clinical course. A recent study (38) reported a case of uveal melanoma with a germline deleterious frameshift deletion in *MBD4* (p.F481Dfs*9), following the loss of the second allele via monosomy, and three acquired hypermutations of outlier CpG>TpG, leading to a response to anti-PD1 therapy. The patient with uveal melanoma was a 76-year-old woman, who had a previous medical history of breast ductal carcinoma *in situ* at 74 years of age and no family history of cancer. Although the location of her germline mutation was different from that in the present case, she had no previous medical history of CRC until 76 years of age. It may be speculated that biallelic inactivation of the *MBD4* gene can initiate carcinogenesis with other alterations in cancer-related genes. However, the phenotype may be different depending on the location of the somatic mutations derived from C>T transitions.

In conclusion, the present case report identified a very rare germline nonsense mutation in the *MBD4* gene in a patient with colonic oligopolyposis and early-stage rectosigmoid cancer. MBD4 function is important for the maintenance of genomic stability at CpG sites. With improvements in NGS technology, the identification of germline *MBD4* variants may increase in individuals with colonic oligopolyposis and early-stage CRC.

Acknowledgements

The authors would like to thank the Wellcome Trust Sanger Institute for providing the datasets colo-829 and colo-829BL, archived in the European Genome-Phenome Archive (accession no. EGAS00000000052), for training of the pipelines used for the detection of somatic mutations.

Funding

The present study was supported in part by a grant-in-aid for the Support Project of the Strategic Research Center in Private Universities from the Ministry of Education, Culture, Sports, Science and Technology of Japan awarded to the Saitama Medical University Research Center for Genomic Medicine (grant. no. S1311002) and the Japan Agency for Medical Research and Development (grant. no. JP18kk0205004).

Availability of data and materials

The datasets used and/or analyzed during the current study are available from the corresponding author on reasonable request.

Authors' contributions

KT and KK drafted the manuscript. KT and HI performed the clinical management of the patient. YT, HE and YO performed all the genetic analysis experiments and contributed to the bioinformatics analysis. TT and KA performed the immunohistochemical staining of MBD4. KK, KI and HI conceived

and designed the study, and edited the manuscript. All authors read and approved the final manuscript.

Ethics approval and consent to participate

This research was approved by the Institutional Review Board at Saitama Medical Center, Saitama Medical University (no. 747) and the Ethics Committee at Saitama Medical University, and was conducted according to the guidelines put forth in the Declaration of Helsinki.

Patient consent for publication

The patient provided written informed consent for the publication of any associated data.

Competing interests

The authors declare that they have no competing interests.

References

1. Grover S, Kastrinos F, Steyerberg EW, Cook EF, Dewanwala A, Burbidge LA, Wenstrup RJ and Syngal S: Prevalence and phenotypes of APC and MUTYH mutations in patients with multiple colorectal adenomas. JAMA 308: 485-492, 2012.
2. Brensinger JD, Laken SJ, Luce MC, Powell SM, Vance GH, Ahnen DJ, Petersen GM, Hamilton SR and Giardiello FM: Variable phenotype of familial adenomatous polyposis in pedigrees with 3' mutation in the APC gene. Gut 43: 548-552, 1998.
3. Spier I, Holzapfel S, Altmüller J, Zhao B, Horpaopan S, Vogt S, Chen S, Morak M, Raeder S, Kayser K, *et al*: Frequency and phenotypic spectrum of germline mutations in POLE and seven other polymerase genes in 266 patients with colorectal adenomas and carcinomas. Int J Cancer 137: 320-331, 2015.
4. Palles C, Cazier JB, Howarth KM, Domingo E, Jones AM, Broderick P, Kemp Z, Spain SL, Guarino E, Salguero I, *et al*: Germline mutations affecting the proofreading domains of POLE and POLD1 predispose to colorectal adenomas and carcinomas. Nat Genet 45: 136-144, 2013.
5. Pursell ZF, Isoz I, Lundström EB, Johansson E and Kunkel TA: Yeast DNA polymerase epsilon participates in leading-strand DNA replication. Science 317: 127-130, 2007.
6. Bellacosa A: Functional interactions and signaling properties of mammalian DNA mismatch repair proteins. Cell Death Differ 8: 1076-1092, 2001.
7. Weren RD, Ligtenberg MJ, Kets CM, de Voer RM, Verwiel ET, Spruijt L, van Zelst-Stams WA, Jongmans MC, Gilissen C, Hehir-Kwa JY, *et al*: A germline homozygous mutation in the base-excision repair gene NTHL1 causes adenomatous polyposis and colorectal cancer. Nat Genet 47: 668-671, 2015.
8. Adam R, Spier I, Zhao B, Kloth M, Marquez J, Hinrichsen I, Kirfel J, Tafazzoli A, Horpaopan S, Uhlhaas S, *et al*: Exome sequencing identifies biallelic MSH3 germline mutations as a recessive subtype of colorectal adenomatous polyposis. Am J Hum Genet 99: 337-351, 2016.
9. Horpaopan S, Spier I, Zink AM, Altmüller J, Holzapfel S, Laner A, Vogt S, Uhlhaas S, Heilmann S, Stienen D, *et al*: Genome-wide CNV analysis in 221 unrelated patients and targeted high-throughput sequencing reveal novel causative candidate genes for colorectal adenomatous polyposis. Int J Cancer 136: E578-E589, 2015.
10. Weren RD, Venkatachalam R, Cazier JB, Farin HF, Kets CM, de Voer RM, Vreede L, Verwiel ET, van Asseldonk M, Kamping EJ, *et al*: Germline deletions in the tumour suppressor gene FOCAD are associated with polyposis and colorectal cancer development. J Pathol 236: 155-164, 2015.
11. Spier I, Kerick M, Drichel D, Horpaopan S, Altmüller J, Laner A, Holzapfel S, Peters S, Adam R, Zhao B, *et al*: Exome sequencing identifies potential novel candidate genes in patients with unexplained colorectal adenomatous polyposis. Fam Cancer 15: 281-288, 2016.
12. Hendrich B, Hardeland U, Ng HH, Jiricny J and Bird A: The thymine glycosylase MBD4 can bind to the product of deamination at methylated CpG sites. Nature 401: 301-304, 1999.
13. Sobin LH, Gospodarowicz MK and Wittekind Ch (eds): Digestive system tumours, colon and rectum. In: TNM Classification of Malignant Tumors. 7th edition. Wiley-Blackwell, Hoboken, NJ, pp100-105, 2009.
14. Kohda M, Kumamoto K, Eguchi H, Hirata T, Tada Y, Tanakaya K, Akagi K, Takenoshita S, Iwama T, Ishida H and Okazaki Y: Rapid detection of germline mutations for hereditary gastrointestinal polyposis/cancers using HaloPlex target enrichment and high-throughput sequencing technologies. Fam Cancer 15: 553-562, 2016.
15. Li H and Durbin R: Fast and accurate short read alignment with Burrows-wheeler transform. Bioinformatics 25: 1754-1760, 2009.
16. McKenna A, Hanna M, Banks E, Sivachenko A, Cibulskis K, Kernytsky A, Garimella K, Altshuler D, Gabriel S, Daly M and DePristo MA: The Genome analysis toolkit: A MapReduce framework for analyzing next-generation DNA sequencing data. Genome Res 20: 1297-1303, 2010.
17. Cibulskis K, Lawrence MS, Carter SL, Sivachenko A, Jaffe D, Sougnez C, Gabriel S, Meyerson M, Lander ES and Getz G: Sensitive detection of somatic point mutations in impure and heterogeneous cancer samples. Nat Biotechnol 31: 213-219, 2013.
18. Gehring JS, Fischer B, Lawrence M and Huber W: SomaticSignatures: Inferring mutational signatures from single-nucleotide variants. Bioinformatics 31: 3673-3675, 2015.
19. Team RC: R: A language and environment for statistical computing. R foundation for statistical computing, Vienna, Austria. URL: https://cran.r-project.org/src/base/R-3/.
20. Yamaguchi-Kabata Y, Nariai N, Kawai Y, Sato Y, Kojima K, Tateno M, Katsuoka F, Yasuda J, Yamamoto M and Nagasaki M: iJGVD: An integrative Japanese genome variation database based on whole-genome sequencing. Hum Genome Var 2: 15050, 2015.
21. Tricarico R, Cortellino S, Riccio A, Jagmohan-Changur S, Van der Klift H, Wijnen J, Turner D, Ventura A, Rovella V, Percesepe A, *et al*: Involvement of MBD4 inactivation in mismatch repair-deficient tumorigenesis. Oncotarget 6: 42892-42904, 2015.
22. Wu P, Qiu C, Sohail A, Zhang X, Bhagwat AS and Cheng X: Mismatch repair in methylated DNA. Structure and activity of the mismatch-specific thymine glycosylase domain of methyl-CpG-binding protein MBD4. J Biol Chem 278: 5285-5291, 2003.
23. Bellacosa A, Cicchillitti L, Schepis F, Riccio A, Yeung AT, Matsumoto Y, Golemis EA, Genuardi M and Neri G: MED1, a novel human methyl-CpG-binding endonuclease, interacts with DNA mismatch repair protein MLH1. Proc Natl Acad Sci USA 96: 3969-3974, 1999.
24. Bader S, Walker M and Harrison D: Most microsatellite unstable sporadic colorectal carcinomas carry MBD4 mutations. Br J Cancer 83: 1646-1649, 2000.
25. Bader S, Walker M, Hendrich B, Bird A, Bird C, Hooper M and Wyllie A: Somatic frameshift mutations in the MBD4 gene of sporadic colon cancers with mismatch repair deficiency. Oncogene 18: 8044-8047, 1999.
26. Evertson S, Wallin A, Arbman G, Rütten S, Emterling A, Zhang H and Sun XF: Microsatellite instability and MBD4 mutation in unselected colorectal cancer. Anticancer Res 23: 3569-3574, 2003.
27. Riccio A, Aaltonen LA, Godwin AK, Loukola A, Percesepe A, Salovaara R, Masciullo V, Genuardi M, Paravatou-Petsotas M, Bassi DE, *et al*: The DNA repair gene MBD4 (MED1) is mutated in human carcinomas with microsatellite instability. Nat Genet 23: 266-268, 1999.
28. Bader SA, Walker M and Harrison DJ: A human cancer-associated truncation of MBD4 causes dominant negative impairment of DNA repair in colon cancer cells. Br J Cancer 96: 660-666, 2007.
29. Millar CB, Guy J, Sansom OJ, Selfridge J, MacDougall E, Hendrich B, Keightley PD, Bishop SM, Clarke AR and Bird A: Enhanced CpG mutability and tumorigenesis in MBD4-deficient mice. Science 297: 403-405, 2002.
30. Wong E, Yang K, Kuraguchi M, Werling U, Avdievich E, Fan K, Fazzari M, Jin B, Brown AM, Lipkin M and Edelmann W: Mbd4 inactivation increases Cright-arrowT transition mutations and promotes gastrointestinal tumor formation. Proc Natl Acad Sci USA 99: 14937-14942, 2002.
31. Hes FJ, Nielsen M, Bik EC, Konvalinka D, Wijnen JT, Bakker E, Vasen HF, Breuning MH and Tops CM: Somatic APC mosaicism: An underestimated cause of polyposis coli. Gut 57: 71-76, 2008.

32. Alexandrov LB, Nik-Zainal S, Wedge DC, Aparicio SA, Behjati S, Biankin AV, Bignell GR, Bolli N, Borg A, Børresen-Dale AL, *et al*: Signatures of mutational processes in human cancer. Nature 500: 415-421, 2013.
33. Schmutte C, Yang AS, Beart RW and Jones PA: Base excision repair of U:G mismatches at a mutational hotspot in the p53 gene is more efficient than base excision repair of T:G mismatches in extracts of human colon tumors. Cancer Res 55: 3742-3746, 1995.
34. Kleihues P, Schäuble B, zur Hausen A, Estève J and Ohgaki H: Tumors associated with p53 germline mutations: A synopsis of 91 families. Am J Pathol 150: 1-13, 1997.
35. Fearon ER and Vogelstein B: A genetic model for colorectal tumorigenesis. Cell 61: 759-767, 1990.
36. Kudo SE, Sugihara Y, Kida H, Ishida F, Miyachi H, Mori Y, Misawa M, Hisayuki T, Kodama K, Wakamura K, *et al*: Depressed-type colonic lesions and 'De Novo' cancer in familial adenomatous polyposis: A colonoscopist's viewpoint. ISRN Gastroenterol 2013: 838134, 2013.
37. Saito Y, Kanai Y, Sakamoto M, Saito H, Ishii H and Hirohashi S: Expression of mRNA for DNA methyltransferases and methyl-CpG-binding proteins and DNA methylation status on CpG islands and pericentromeric satellite regions during human hepatocarcinogenesis. Hepatology 33: 561-568, 2001.
38. Rodrigues M, Mobuchon L, Houy A, Fiévet A, Gardrat S, Barnhill RL, Popova T, Servois V, Rampanou A, Mouton A, *et al*: Outlier response to anti-PD1 in uveal melanoma reveals germline MBD4 mutations in hypermutated tumors. Nat Commun 9: 1866, 2018.